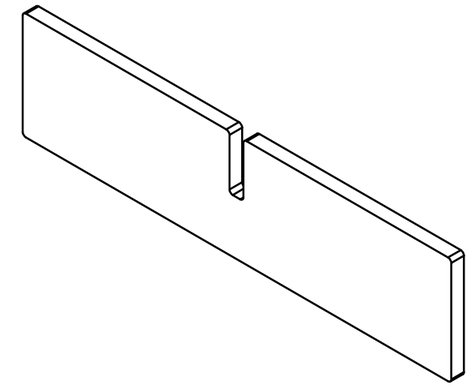

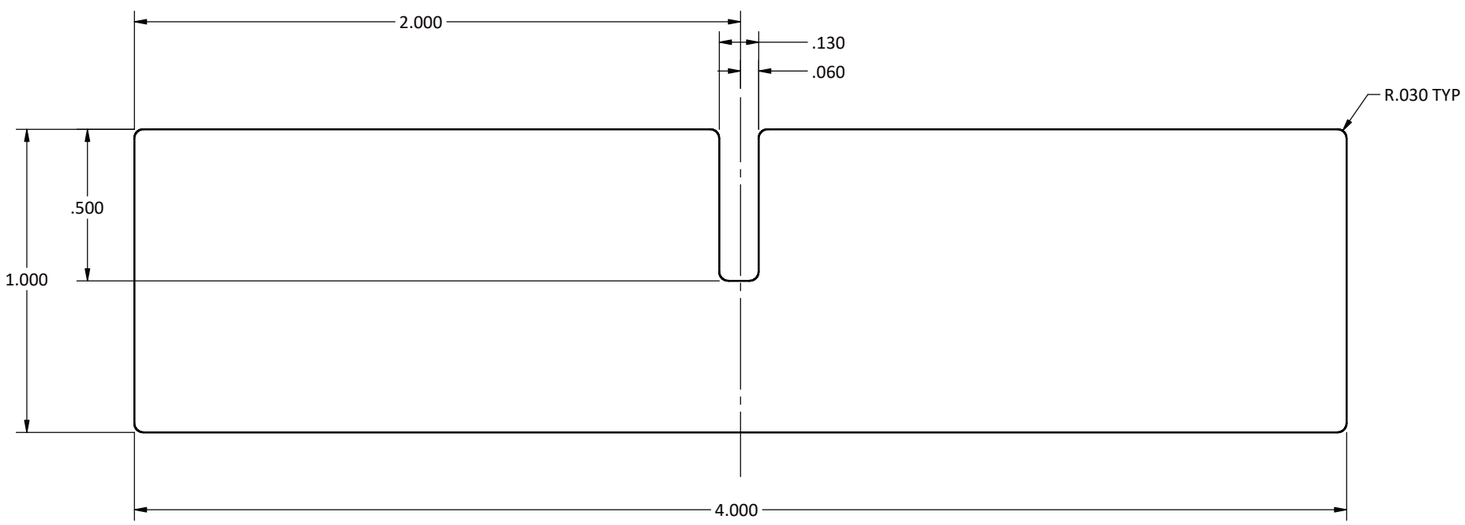

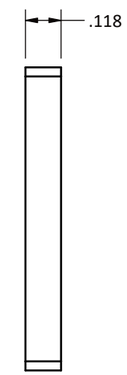

NOTES:

- **PRE-FORMED WEIGHT 14 GRAMS**
- **FINISHED WEIGHT 8 GRAMS**
- **MATERIAL: SBR RUBBER**
- **70 DUROMETER**

REVISIONS

	NAME	DATE	NOTES
1	JEM	10/28/15	REDRAW IN SW
2			
3			
4			
5			
6			
7			
8			

RUBBER SPACER (1/8" THICK)

UNLESS OTHERWISE SPECIFIED
DIMENSIONS ARE IN INCHES
TOLERANCE:
FRACTIONS ± 1/8" ANGLE ±0.5°
DIM: 2-PL ±0.01 3-PL ±.005

DRAWN BY: MJ 8/1/11
DATE: 6/23/2025
MATERIAL:
CO NUMBER:
WEIGHT:
NUMBER: **10020**